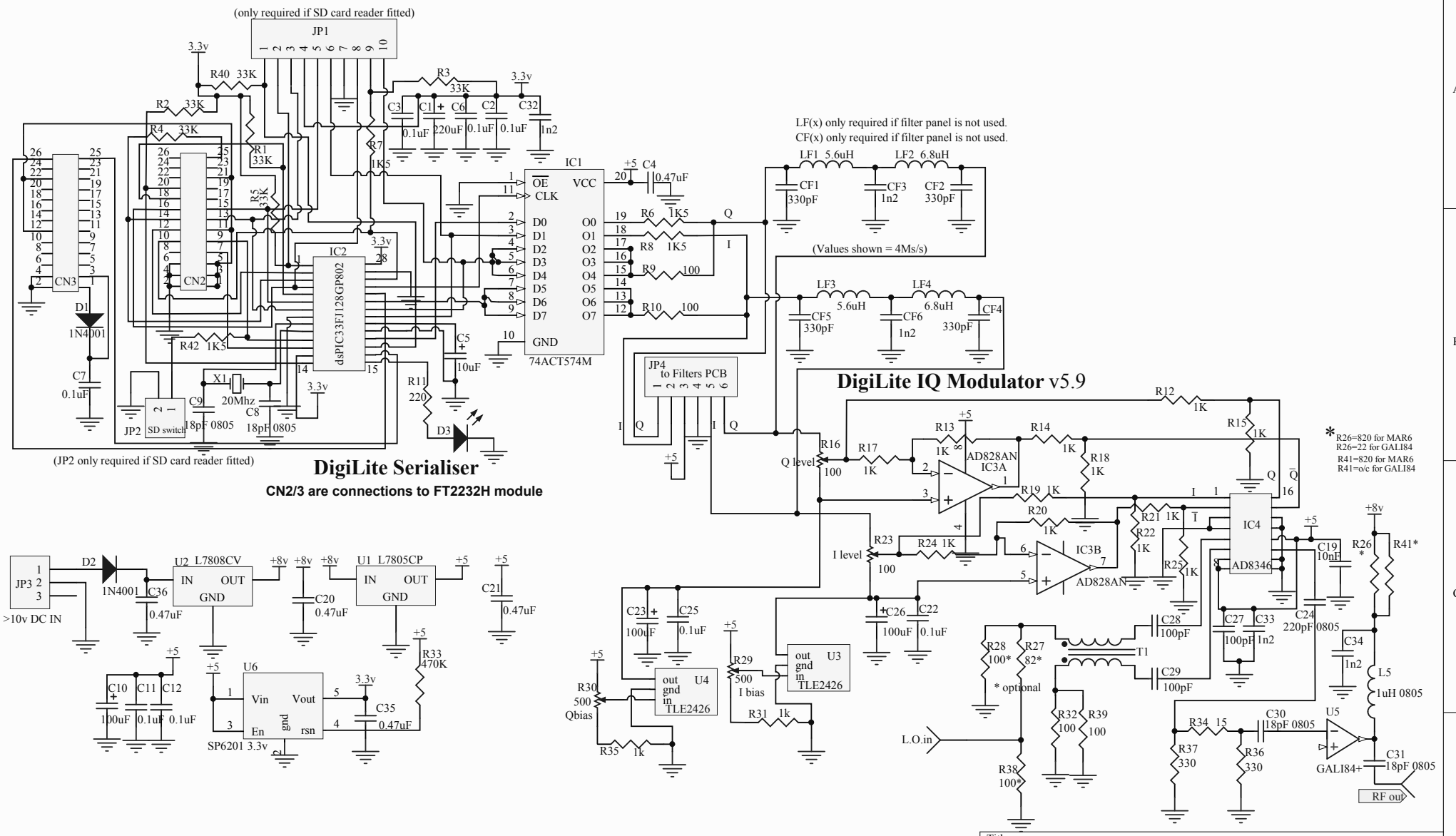

DigiLite Serialiser

CN2/3 are connections to FT2232H module

Title: DigiLite Serialiser and Modulator		
Size: A4	Number: drawing by G8AJN	Revision: v5.9 19/05/2013
Date: 07/06/2013		Sheet of
File: C:\CAD Files\..\DigiLitev5.9.SchDoc		Drawn By: